SUNFLEX

Folding Sliding Door System
System SF 75h
Insulated Wood System

Index

Description	Page
General information & product features	1.4-1.8
Technical Information	1.9-1.16
Measurement	2.1-2.2
Assembly instructions	3.1-3.13
Maintenance and servicing instructions	4.1-4.4
Warranty	5.1-5.2
Terms of sale	6.1-6.5

Wood Folding Doors

Wood is pure nature – its look as well as its touch conveys a sense of warmth and comfort. As a naturally grown raw material, wood ideally combines ecological as well as economical aspects. Timber also has convincing constructive benefits as it is exceptionally durable. The new SF 75H system measures 75 mm front to back and has excellent weather - proofing and thermal properties.

System information

- ☐ Perfectly matching components
- ☐ Low construction depths and slim profile designs
- ☐ Choice of inward or outward opening folding panels
- ☐ Panel distribution and folding direction of panels freely selectable
- ☐ Storm-proof and burglary-resistant metal fittings
- ☐ Various glazing types, lock types, colors, species of wood, etc. available
- ☐ Easy assembly

Technical modifications and errors reserved.

Operation

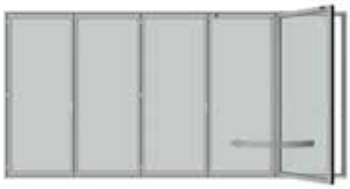

Opening of the first panel

Folding of the hinge connected panels

Parking of the folded panels

Running rails

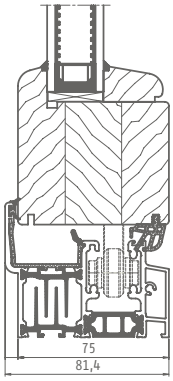

Bottom rail

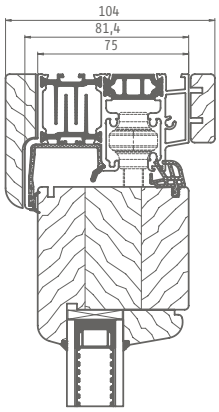

Top rail

Panel size diagram

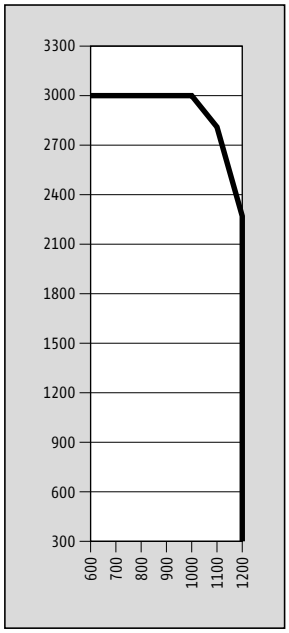

Special sizes on request

Tested SUNFLEX quality

Technical modifications and errors reserved.

Corner angles 90°-180° with or without corner post

Typ I

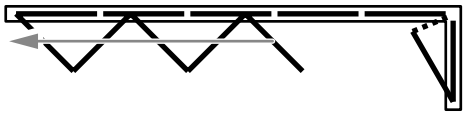

Typ A

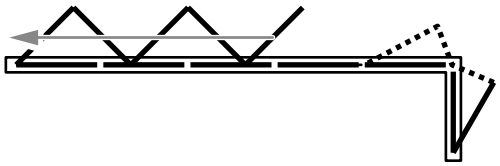

Typ I

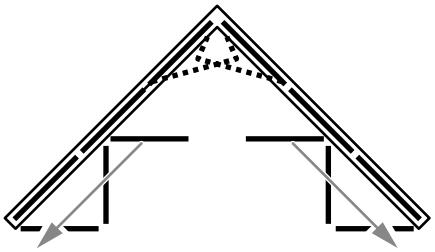

Typ A

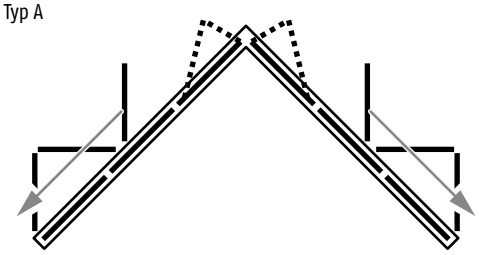

Segmented systems

Typ I

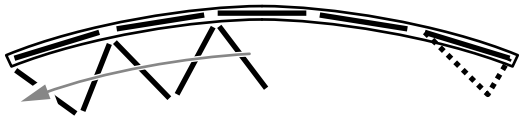

Typ A

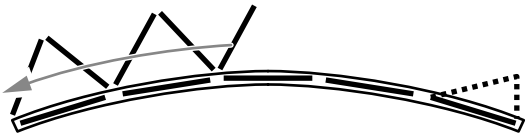

Corner angles 90°-180°

Typ I

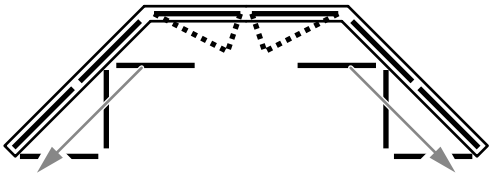

Typ A

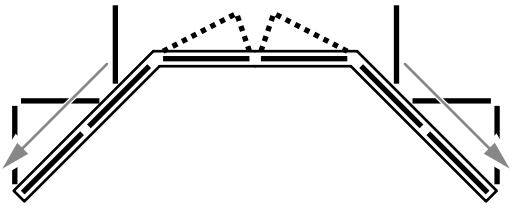

Other floor plan geometries upon request

Typ A = Outward opening of panels Typ I = Inward opening of panels

Technical Details

Handles
☐ proper Sunflex handle series

Locking
☐ hinge bolt locking for optimal tightness and burglar resistance

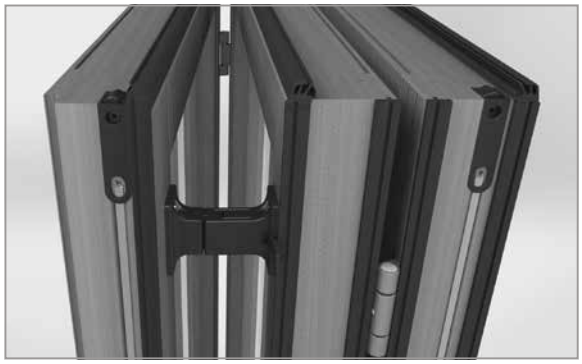

Catcher
☐ panel catcher for additional security to fix the pass door to the adjacent panel

Sealing
☐ continous gaskets in the hinge area for optimal tightness between the panels

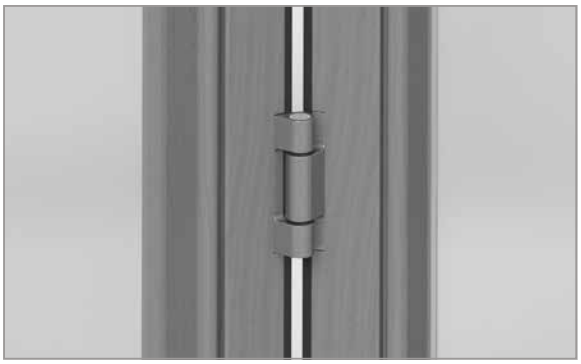

Fittings
☐ recessed burglar resistant fittings

Height adjustment
☐ post installation height adjustment of the running mechanisms possible

Technical modifications and errors reserved.

Technical Information

Profile system

☐ Wood folding partition made of three-layer laminated woods
☐ Bottom-supported construction
☐ Construction profile depth 2 15/16" (75 mm)
☐ Opens inwards, outwards or pivoting
☐ Opens by sliding to one side or both sides
☐ Option of frame profiles on all sides
☐ Height adjustment after installation possible

Hardware

☐ All fittings hidden within profiles
☐ Low-maintenance, non-corroding and failsafe hardware components
☐ Panels lock via rods that engage in floor and ceiling tracks and/or via sliding doors that engage in the frames or with the neighboring panels
☐ Locking and unlocking via actuating levers with anti-intruder catches
☐ Optionally fitted with different lock types
☐ Hinges feature pivot pins that cannot be knocked out (anti-intruder feature)
☐ A pivoting panel can be securely clamped to the adjacent panel using snap latches

Runner system

☐ Simple adjustment due to a height-adjustable runner assembly system
☐ Runner assemblies are situated above water drainage collection area
☐ Low-noise, hard-wearing, heat and cold resistant running rollers

Sealing and ventilation

☐ Rain and wind proofing ensured by EPDM seals at two sealing levels

Glazing

☐ Glazing configuration 1/4" to 1 9/16" (6 mm to 40 mm) possible
☐ Glazing can be replaced without difficulty

Technical modifications and errors reserved.

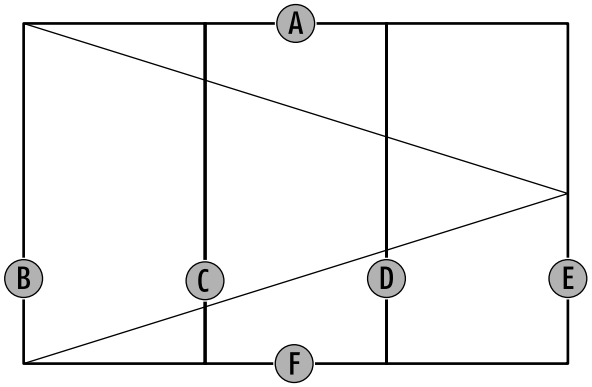

Details at uneven panel partitioning in one direction

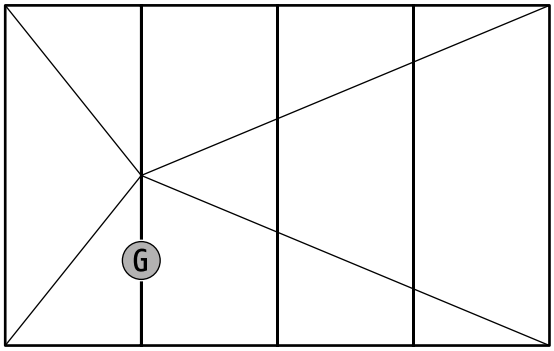

Details at even and uneven panel partitioning in two directions

Ref.	Section	Description	Page
--	SF75H-000	Vertical-Section, glazing beads designs (softline + square - edge)	1.11
F	SF75H-001	Vertical-Section, connection bottom track / inwards folding	1.11
F	SF75H-003	Vertical-Section, connection bottom track / outwards folding	1.11
F	SF75H-005	Vertical-Section, connection flush bottom track	1.11
A	SF75H-002	Vertical-Section, connection top track / inwards folding	1.12
A	SF75H-004	Vertical-Section, connection top track / outwards folding	1.12
B	SF75H-101	Horizontal-Section, side jamb - panel closing section / inwards folding	1.12
B	SF75H-102	Horizontal-Section, side jamb - panel closing section / outwards folding	1.12
D	SF75H-103	Horizontal-Section, panel - panel / hinge outwards	1.13
C	SF75H-104	Horizontal-Section, panel - panel / hinge inwards	1.13
E	SF75H-105	Horizontal-Section, vertical post - panel / hinge inwards	1.13
E	SF75H-106	Horizontal-Section, vertical post - panel / hinge outwards	1.13
D	SF75H-107	Horizontal-Section, midrail	1.14
G	SF75H-108	Horizontal-Section, panel - panel closing section	1.14
D	SF75H-113	Horizontal-Section, sliding post / hinge outwards	1.14
D	SF75H-121	Horizontal-Section, sliding post / hinge inwards	1.14
D	SF75H-115	Horizontal-Section, closing section - sliding post (e.g. 1L/2R) / outwards folding	1.15
D	SF75H-116	Horizontal-Section, closing section - sliding post (e.g. 1L/2R) / inwards folding	1.15
C	SF75H-117	Horizontal-Section, side jamb - panel closing section incl. sliding post (e.g. 2R) / o. f.	1.15
C	SF75H-118	Horizontal-Section, side jamb - panel closing section incl. sliding post (e.g. 2R) / i. f.	1.15
--	SF75H-119	Horizontal-Section, profil section - sliding post (e.g. 2L/2R) / outwards folding	1.16
--	SF75H-120	Horizontal-Section, profil section - sliding post (e.g. 2L/2R) / inwards folding	1.16

Technical modifications and errors reserved.

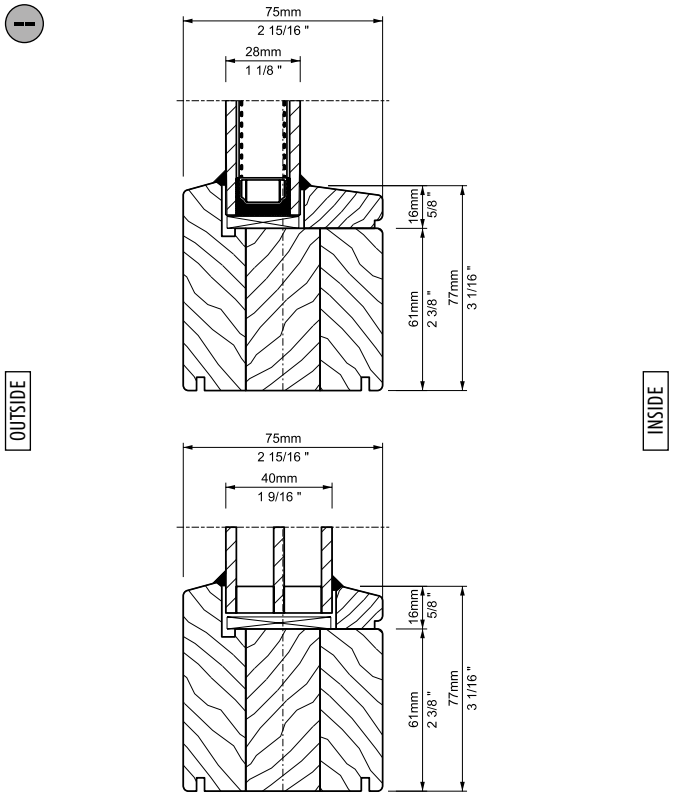

Description:	System: SF75H
Vertical-Section, glazing beads designs (softline + square - edge)	Detail-No.: SF75H-000

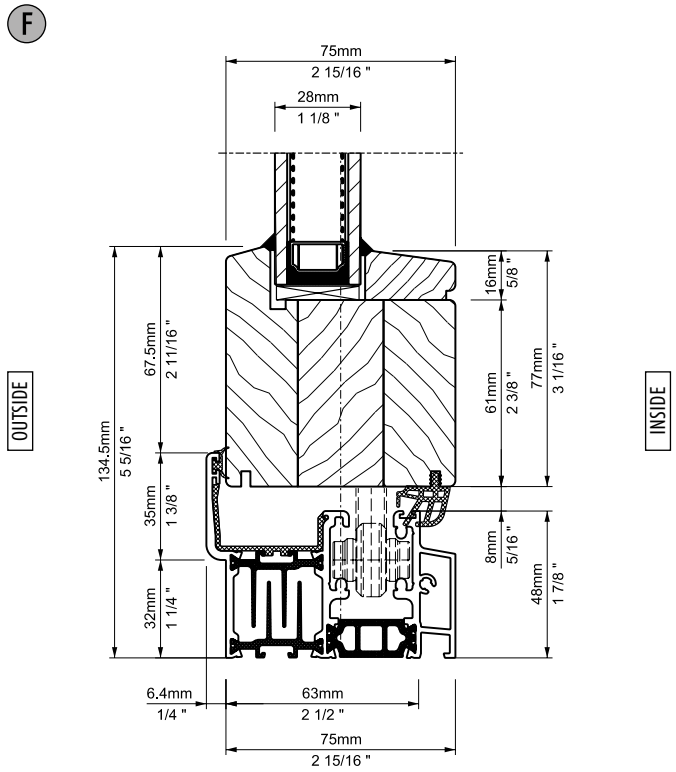

Description:	System: SF75H
Vertical-Section, connection bottom track / inwards folding	Detail-No.: SF75H-001

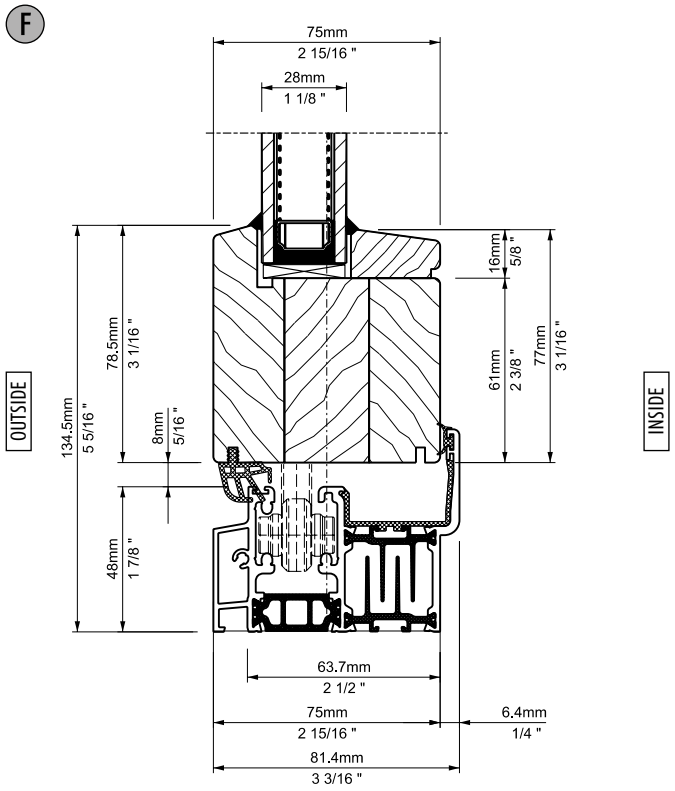

Description:	System: SF75H
Vertical-Section, connection bottom track / outwards folding	Detail-No.: SF75H-003

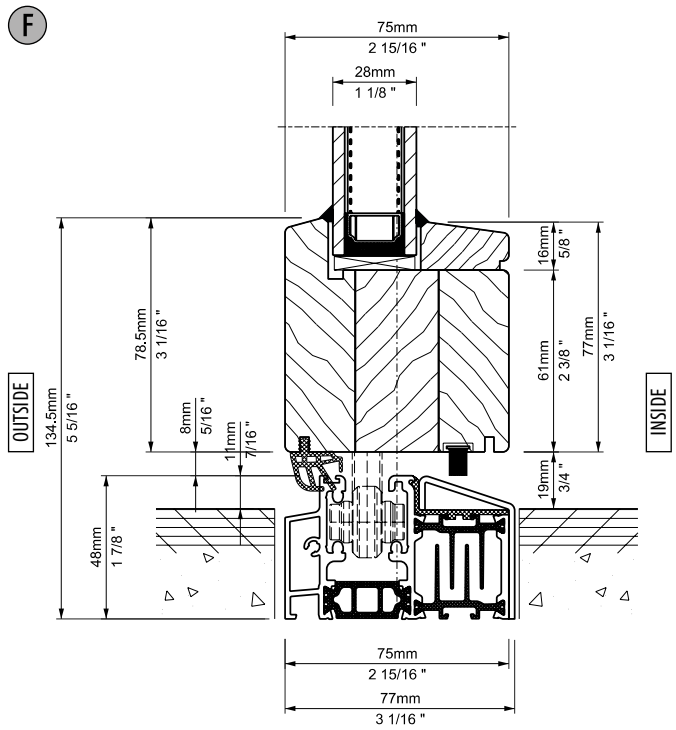

Description:	System: SF75H
Vertical-Section, connection flush bottom track	Detail-No.: SF75H-005

Technical modifications and errors reserved.

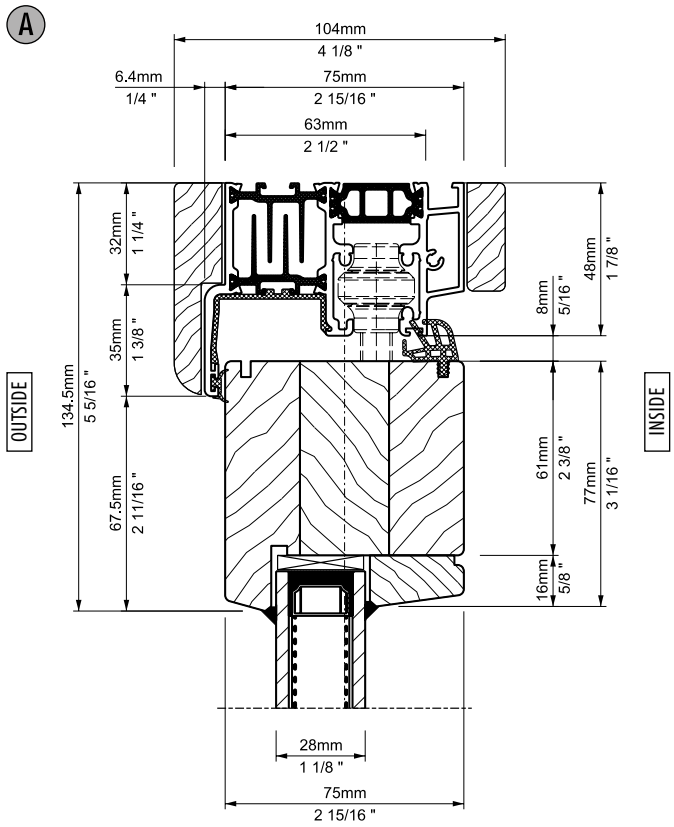

Description:	System: SF75H
Vertical-Section, connection top track / inwards folding	Detail-No.: SF75H-002

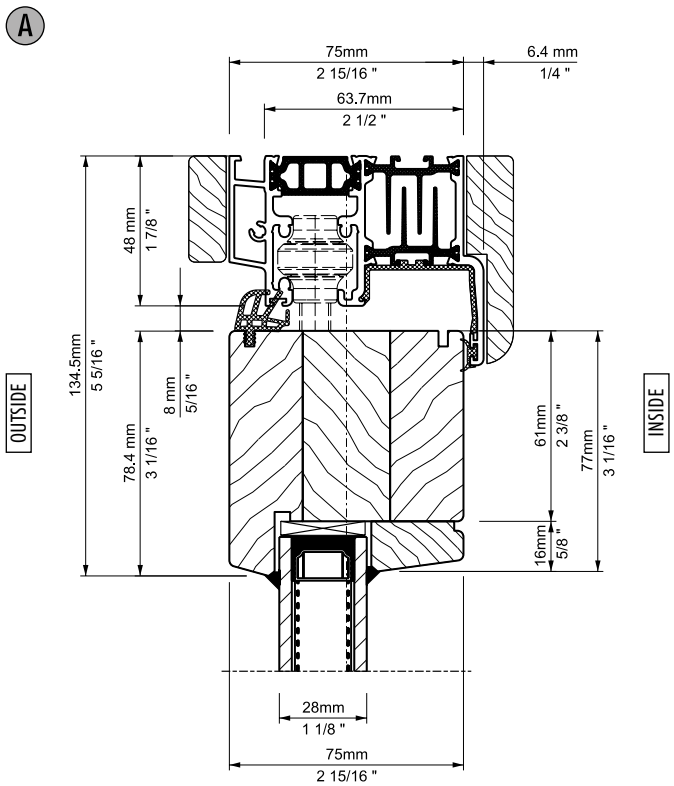

Description:	System: SF75H
Vertical-Section, connection top track / outwards folding	Detail-No.: SF75H-004

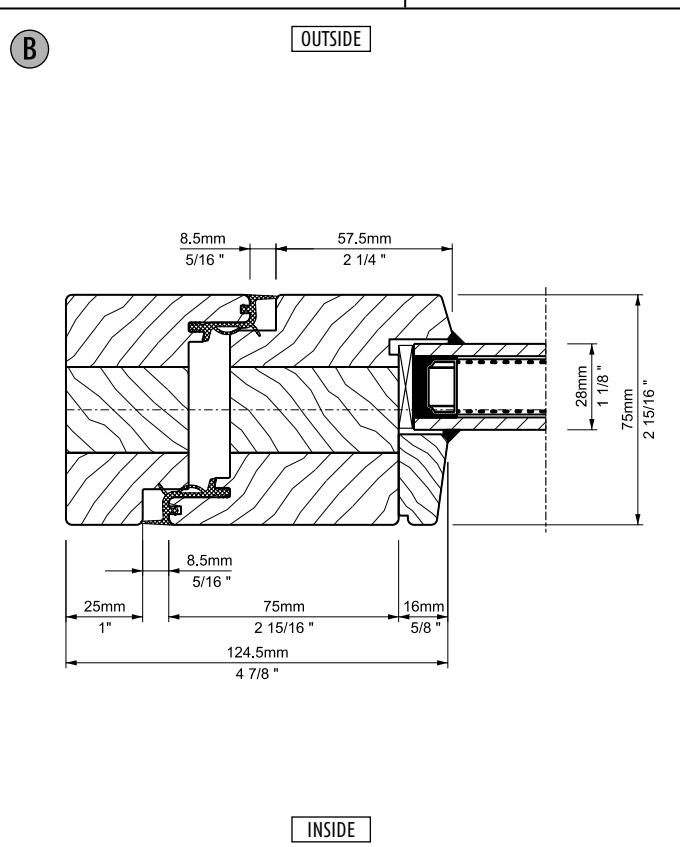

Description:	System: SF75H
Horizontal-Section, side jamb - panel closing section / inwards folding	Detail-No.: SF75H-101

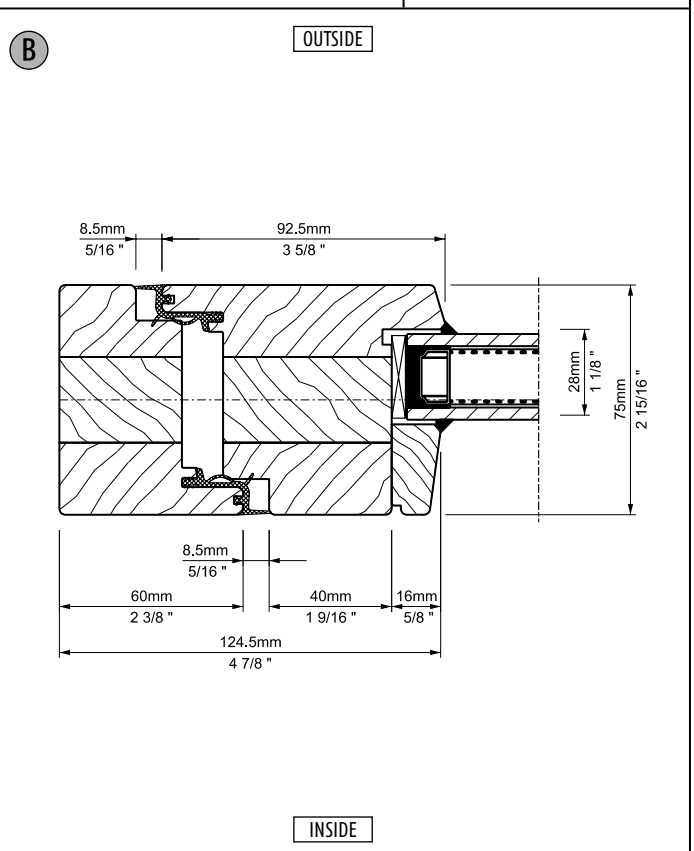

Description:	System: SF75H
Horizontal-Section, side jamb - panel closing section / outwards folding	Detail-No.: SF75H-102

Technical modifications and errors reserved.

D

OUTSIDE

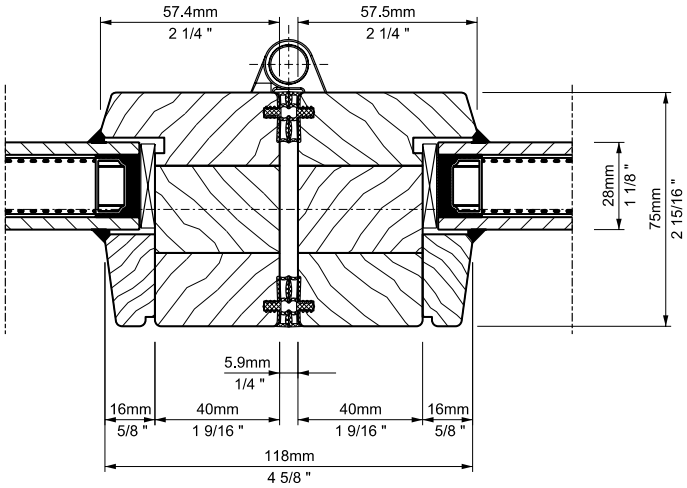

INSIDE

Description:	Horizontal-Section, panel - panel / hinge outwards	System: SF75H	Detail-No.: SF75H-103

C

OUTSIDE

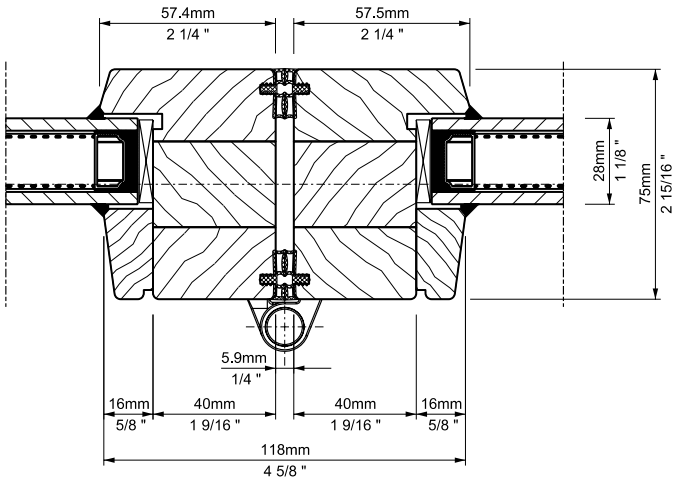

INSIDE

Description:	Horizontal-Section, panel - panel / hinge inwards	System: SF75H	Detail-No.: SF75H-104

E

OUTSIDE

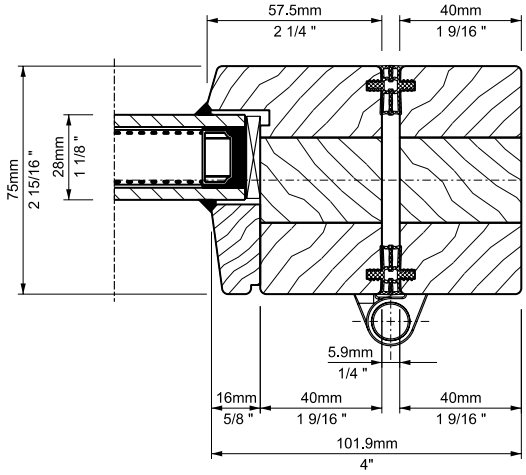

INSIDE

Description:	Horizontal-Section, vertical post - panel / hinge inwards	System: SF75H	Detail-No.: SF75H-105

E

OUTSIDE

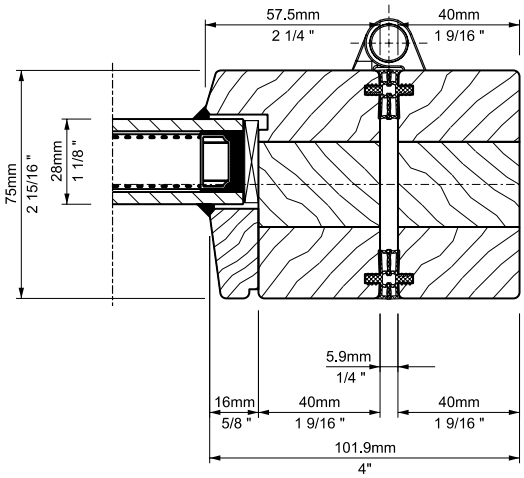

INSIDE

Description:	Horizontal-Section, vertical post - panel / hinge outwards	System: SF75H	Detail-No.: SF75H-106

Technical modifications and errors reserved.

D

OUTSIDE

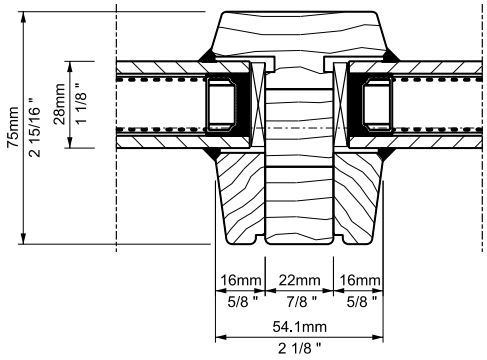

INSIDE

Description:	System: SF75H
Horizontal-Section, midrail	Detail-No.: SF75H-107

G

OUTSIDE

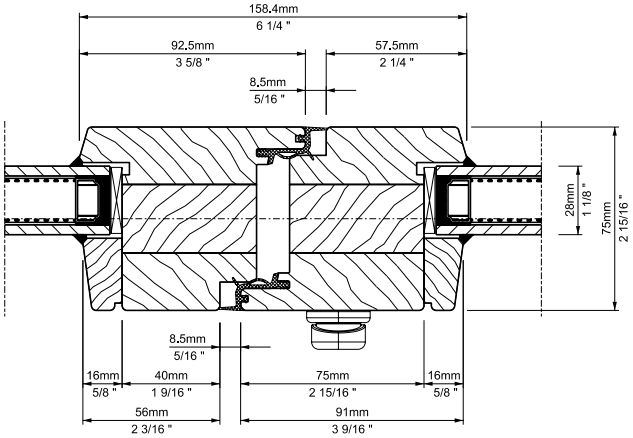

INSIDE

Description:	System: SF75H
Horizontal-Section, panel - panel closing section	Detail-No.: SF75H-108

D

OUTSIDE

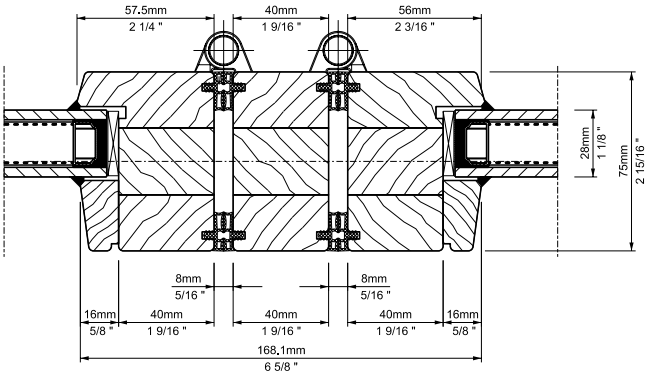

INSIDE

Description:	System: SF75H
Horizontal-Section, sliding post / hinge outwards	Detail-No.: SF75H-113

D

OUTSIDE

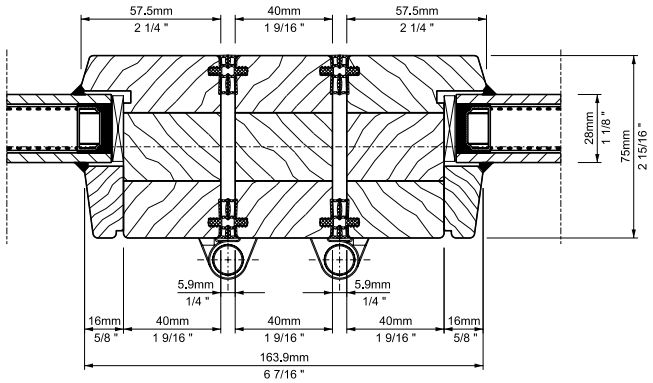

INSIDE

Description:	System: SF75H
Horizontal-Section, sliding post / hinge inwards	Detail-No.: SF75H-121

Technical modifications and errors reserved.

D

OUTSIDE

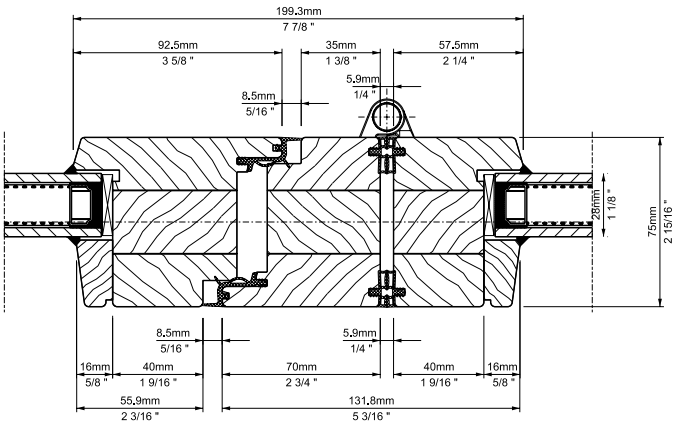

INSIDE

Description: Horizontal-Section, closing section - sliding post (e.g. 1L/2R) / outwards folding	System: SF75H Detail-No.: SF75H-115

C

OUTSIDE

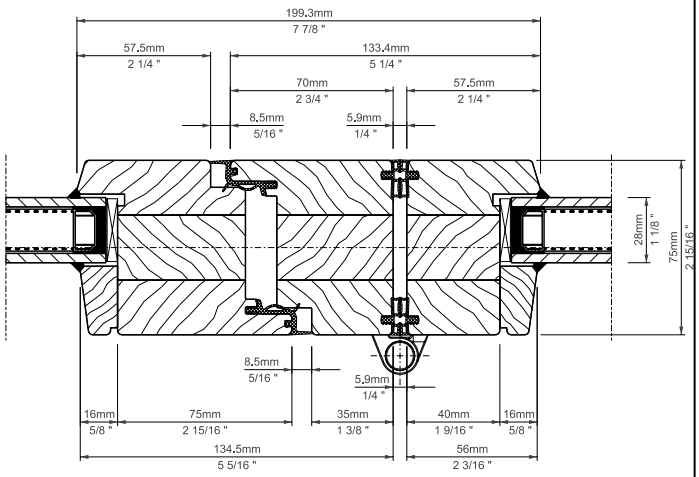

INSIDE

Description: Horizontal-Section, closing section - sliding post (e.g. 1L/2R) / inwards folding	System: SF75H Detail-No.: SF75H-116

C

OUTSIDE

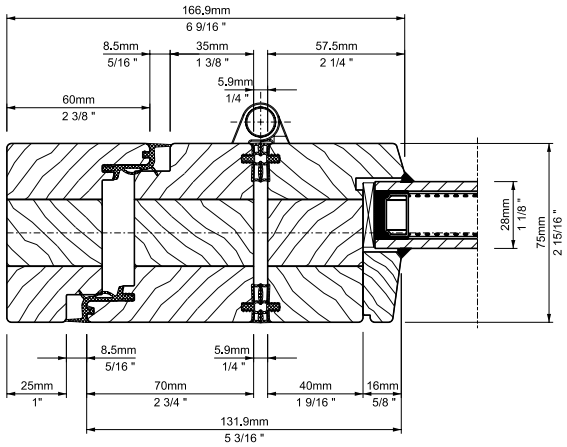

INSIDE

Description: Horizontal-Section, side jamb - panel closing section incl. sliding post (e.g. 2R) / o. f.	System: SF75H Detail-No.: SF75H-117

E

OUTSIDE

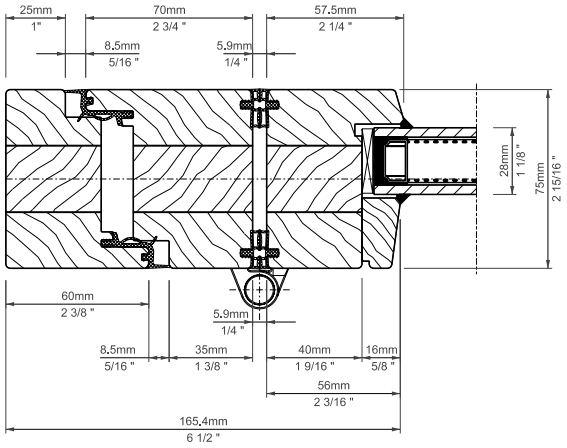

INSIDE

Description: Horizontal-Section, side jamb - panel closing section incl. sliding post (e.g. 2R) / i. f.	System: SF75H Detail-No.: SF75H-118

Technical modifications and errors reserved.

E

OUTSIDE

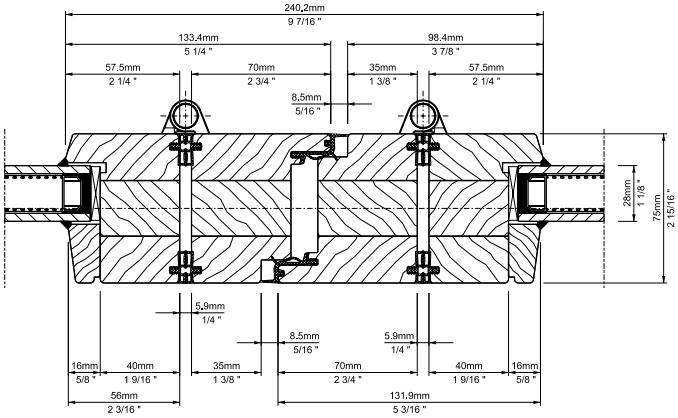

INSIDE

Description:	System:
Horizontal-Section, profil section - sliding post (e.g. 2L/2R) / outwards folding	SF75H
	Detail-No.: SF75H-119

E

OUTSIDE

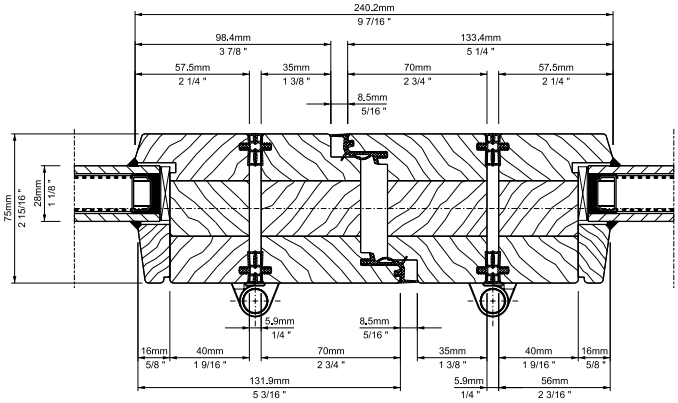

INSIDE

Description:	System:
Horizontal-Section, profil section - sliding post (e.g. 2L/2R) / inwards folding	SF75H
	Detail-No.: SF75H-120

Technical modifications and errors reserved.

Measurement

It is important to measure at multiple points for both height and width making sure to capture the shortest height and width.

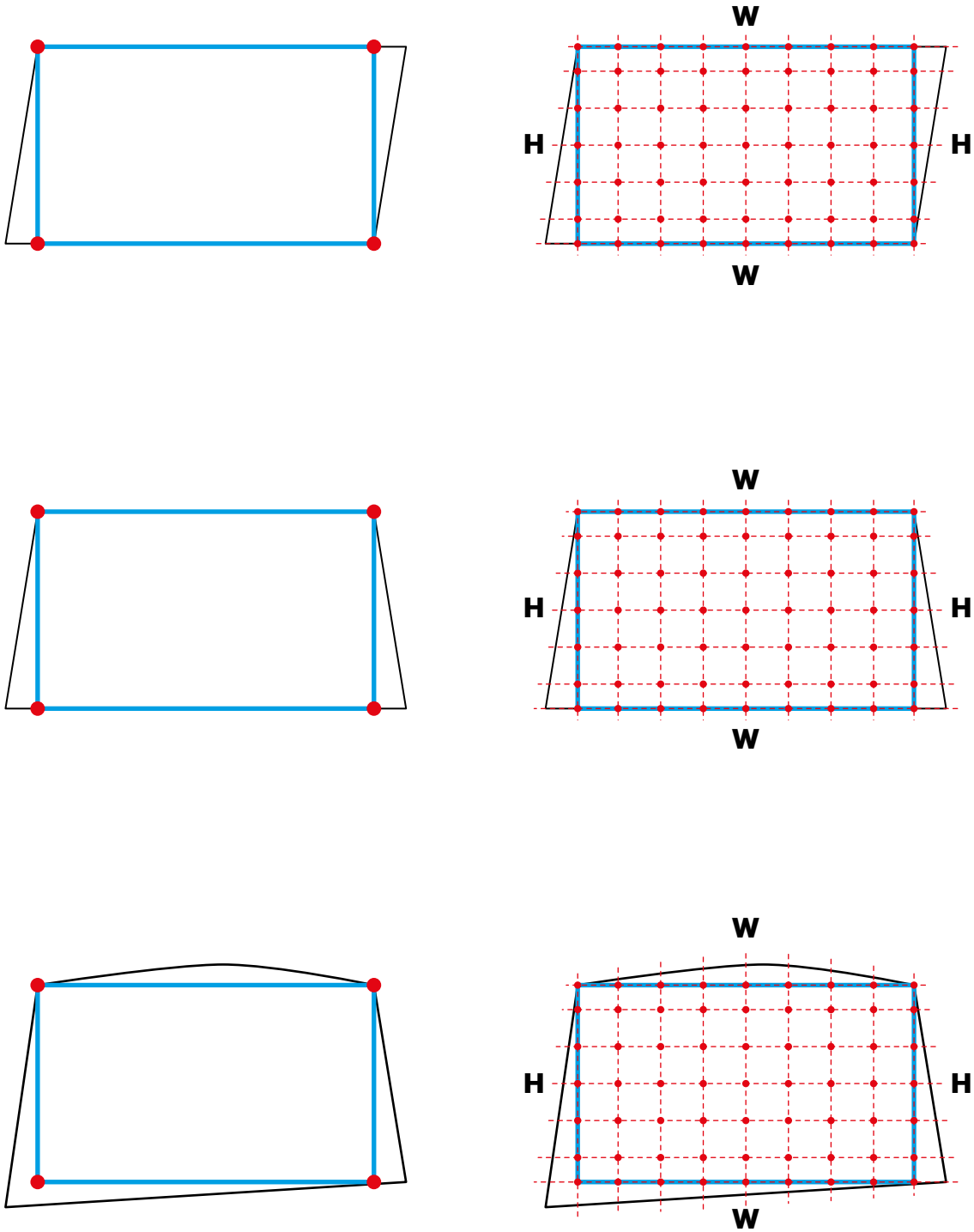

Assembly instructions

SF 50 / SF 50c
SF 55 / SF 55c
SF 75 / SF 75c / SF 75H

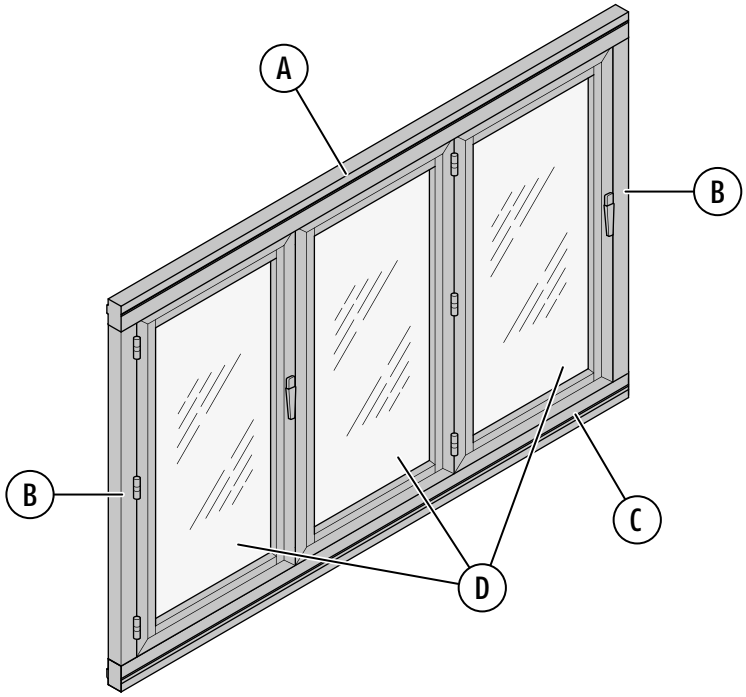

Scope of delivery:

A. Top rail
B. Vertical profile
C. Floor rail
D. Hinged panel, sliding panel
Accessories pack

Safety instructions:

These assembly instructions are specifically designed for the use of authorized specialists. Observation and implementation of the relevant safety regulations are a prerequisite.

Symbols used:

Caution

Note

Tools required:

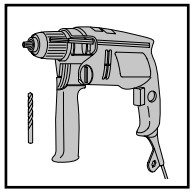
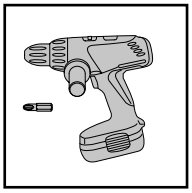
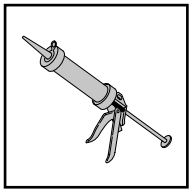
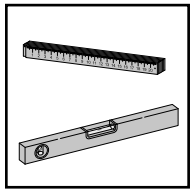
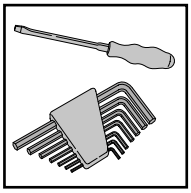

Technical modifications and errors reserved.

Content

Description	Page
1. Assembly of door frame	3.3
2. Installation of door frame	3.4
3. Fitting of panel	3.5, 3.6
4. Adjustment	3.6
5. External foam sealing	3.7
6. Fitting of accessories	3.7
SF 50 (c+i), SF 55 (c+i), SF 75 (c), SF 75H sliding post with odd number of panels	3.8
SF 50 (c+i), SF 55 (c+i), SF 75 (c), SF 75H sliding post with even number of panels	3.9
Assembly of the panel notch	3.10
Assembly only for SF 75H	3.11 - 3.13

Importent:

After successful assembly the fitter must give instructions to the customer in order to avoid incorrect operation.

© Copyright | SUNFLEX Aluminiumsysteme GmbH | Im Ruttenberge 12 | D-57482 Wenden | Issue: 04/2015

1. Assembly of the door frame

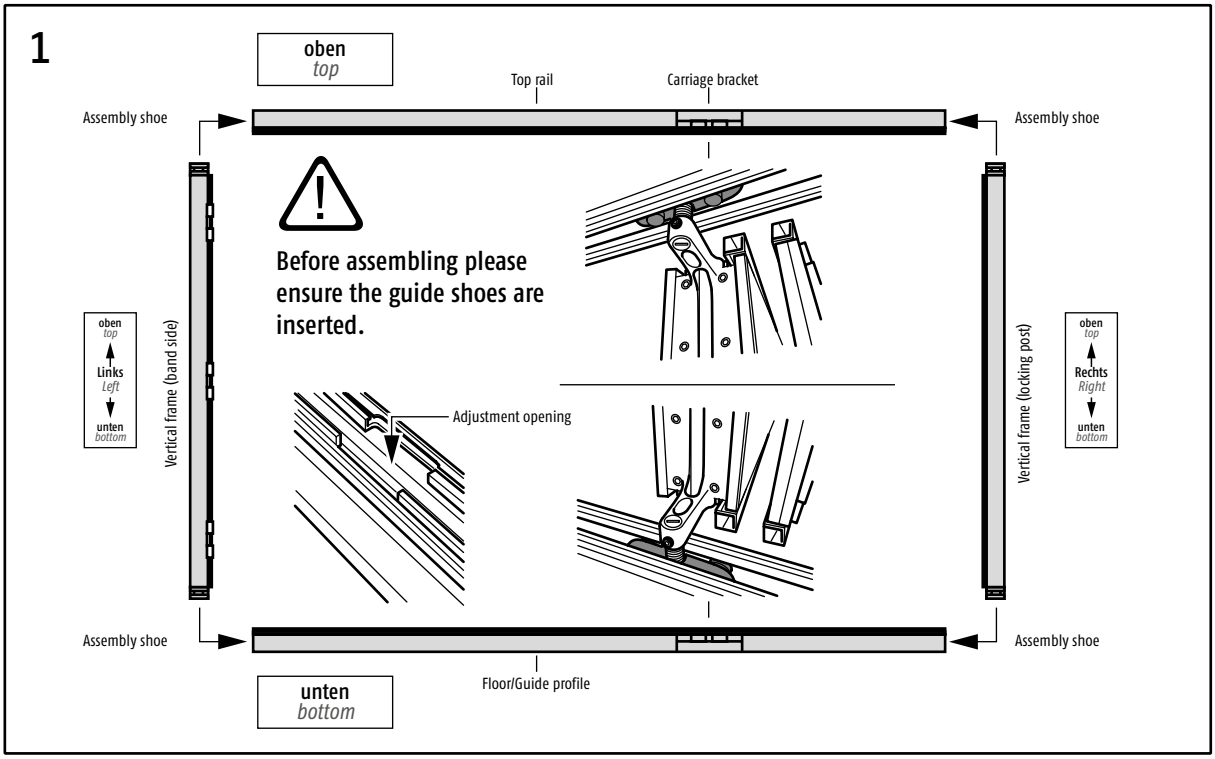

- Unpacking the supplied frame profile.
- Sorting of the frame profile
  - The floor rail has external water drain slots on the internal opening element.
  - Top rail has no water drain slots.
  - The vertical profiles are marked “right‘ and “left‘ (viewed from the inside) on the wall side.
- The vertical profiles must be pushed flush into the guide rail.
- Cutout (Adjustment opening) is directed only at the bottom rail, on the hinge side.

2. Installation of the door frame

2

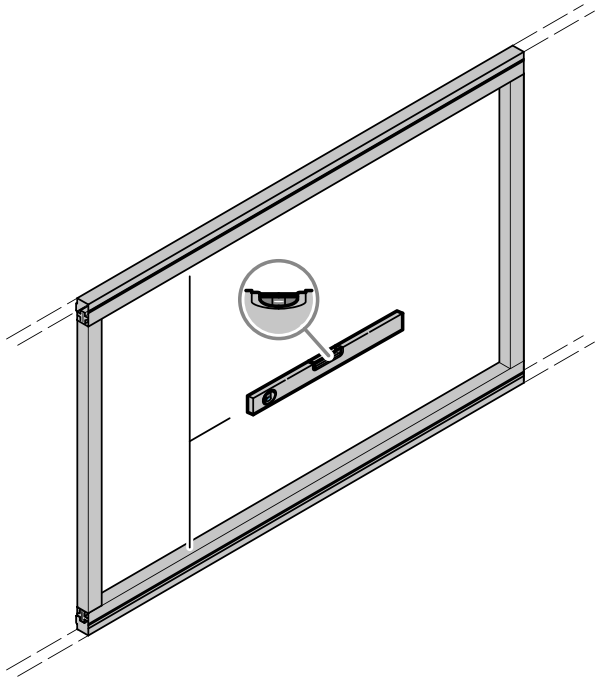

- Place the frame in the building opening.
- Arrange door frame vertically.

Check for parallel fitting!

2a

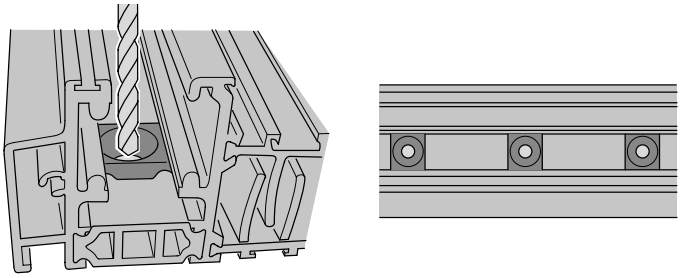

- Determination of fixing points (pic 2a).
  - Approx 4-7 inches from external frame cover, distribute remainder at an interval of approx 12-15 inches.
  - The vertical assembly points are distributed evenly along the height.
- Support floor rail every 12 inches.
- Rectangle the alignment and wedging of the frame.
- Screw tight all profiles except for the locking posts.

3. Fitting the panel

3

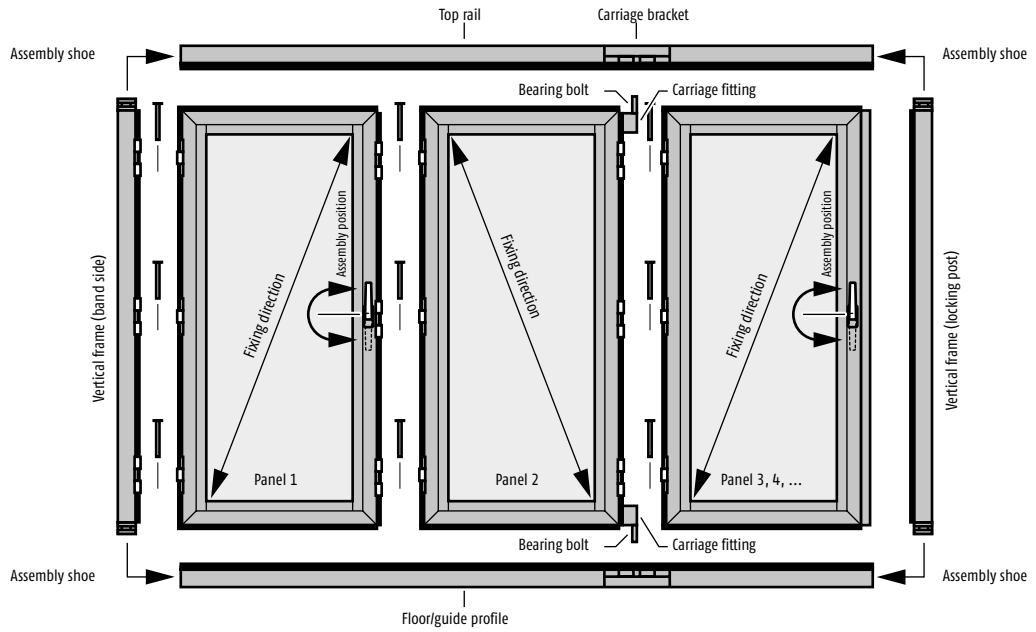

4

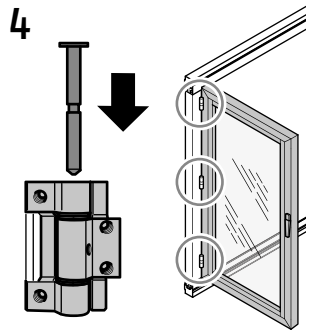

- Fit the first panel and secure with the hinge bolts provided (the panels are numbered at the top and bottom.

Position of handle:
If the locking bar on the panel profile is firmly pushed in flush the handle always points upwards.

5

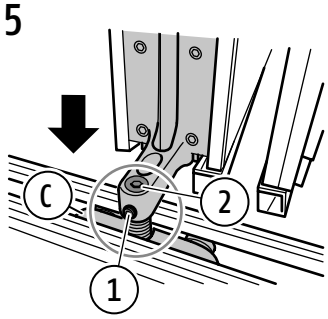

- Place the second panel with the bearing bolts in the carriage (C) and fit to the first panel.
- The upper bearing bolt must be pressed fully down.

1 = Lock using M5 grub screw
Allen key 2.5 mm
2 = Height adjustment using M10 grub screw
Allen key 5 mm

Clearance panel to floor rail approx. 3/8 inch.

Technical modifications and errors reserved.

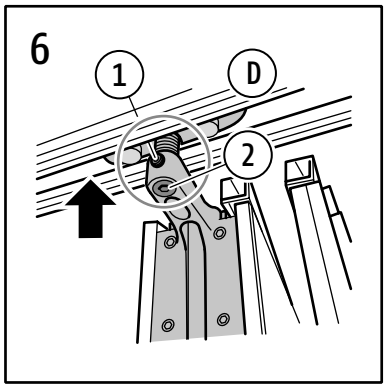

- Now screw the upper bearing bolt into the guide carriage (D) until the bolt is flush with the bracket.
- Close the first pair of panels and repeat the first four steps of point 3 according to the number of panels and panel arrangement.

1 = Lock using M5 grub screw
Allen key 2.5 mm
2 = Height adjustment using M10 grub screw
Allen key 5 mm

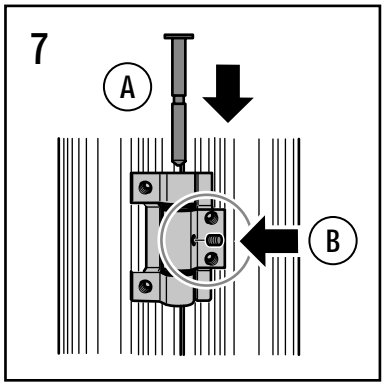

- All hinge bolts should now be secured with the supplied grub screws (B). The corresponding holes are in the integral hinge section. They are clearly visible when an element is open.

4. Adjustment

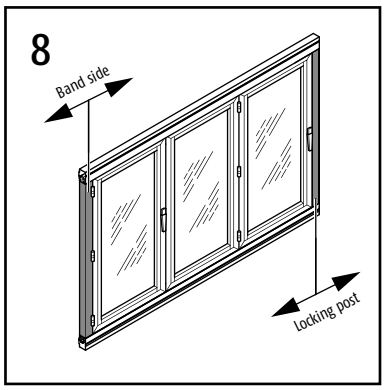

- The closure clearance is set by sliding the door frame locking post. When the locking post shows a constant (approx 3/8 inch wide) closure clearance with the panel, this can then be wedged and screwed in.
- For panel distribution left and right the closure is set by re-wedging of the band side vertical post.
- The adjustment bearing bolts permit the panel height within the picture frame to be adjusted. This can be easily adjusted in the mounted state with unlocked panels.

Technical modifications and errors reserved.

5. Foam sealant

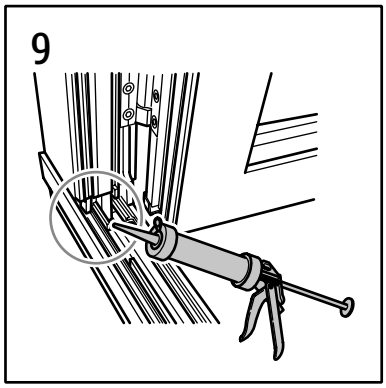

The door frame corners must be fully sealed from the inside.

6. Accessory installation

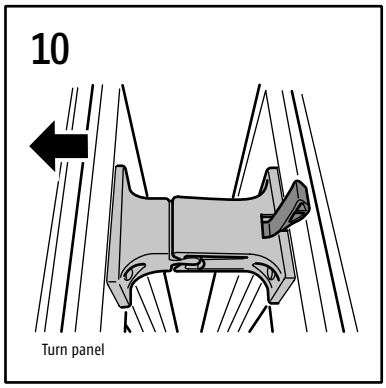

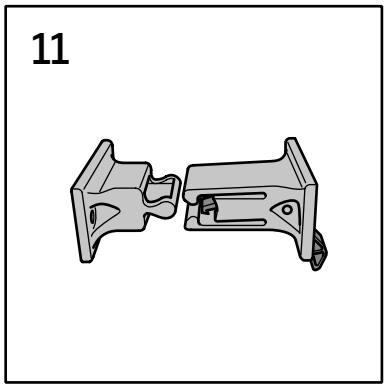

- Diagram shows view from above of the SF clip.

- Fit the supplied panel clips to the panel as shown in the illustration.
- To release, move panel packet from parking position. The trigger lock released automatically when closing.

The illustration shows the stop strip (swivel panel).

Only by uneven number of panels (3, 5, 7 ...)

SF 50 (c+i), SF 55 (c+i), SF 75 (c), SF 75 H sliding post with odd number of panels

1

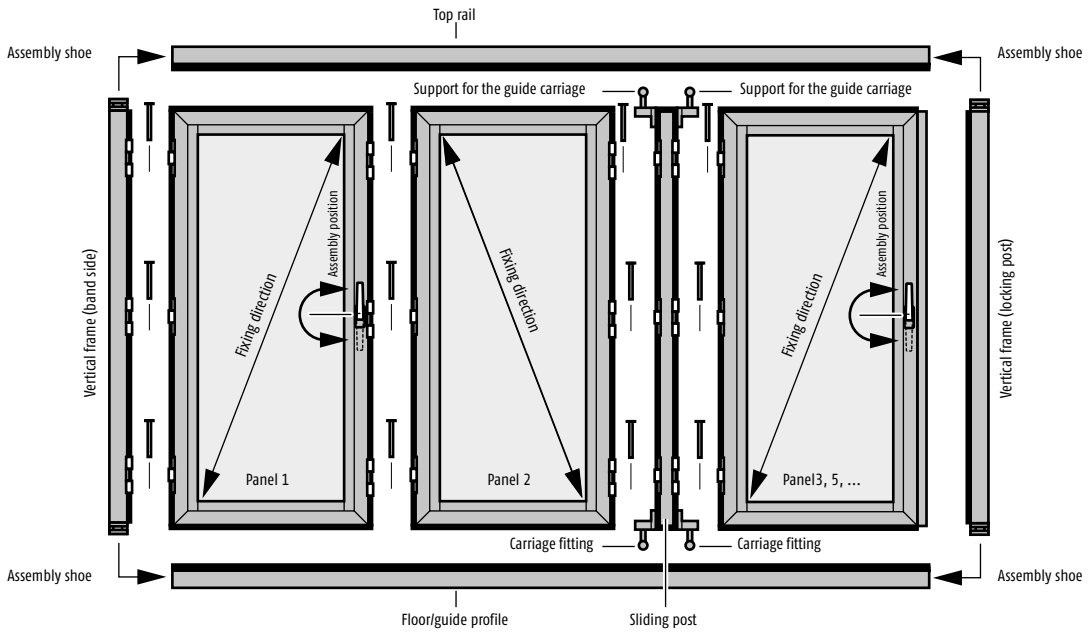

2

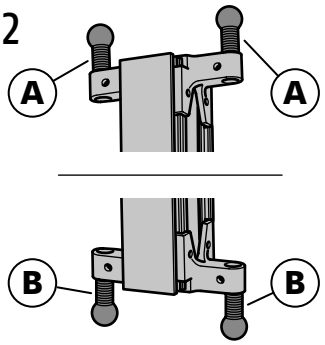

3

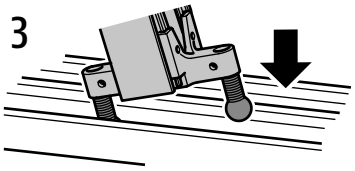

4

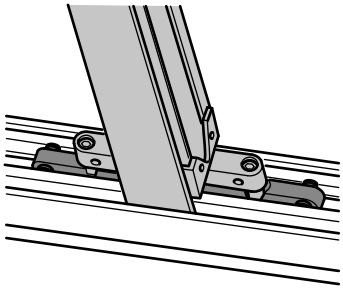

- Picture 2:

  Bolt (A) carriage bracket
  Bolt (B) carriage

5

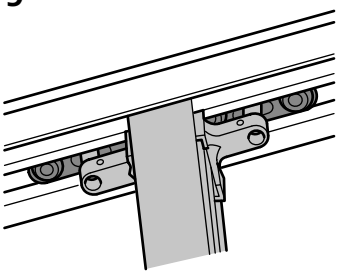

- Insert the sliding post in a slightly angled position first into the carriages (bottom rail, picture 3) and only afterwards into the carriage brackets (top rail).
- Picture 4 shows sliding post positioned in bottom rail.
- Picture 5 shows sliding post positioned in top rail.

Technical modifications and errors reserved.

SF 50 (c+i), SF 55 (c+i), SF 75 (c), SF 75 H sliding post with even number of panels

1

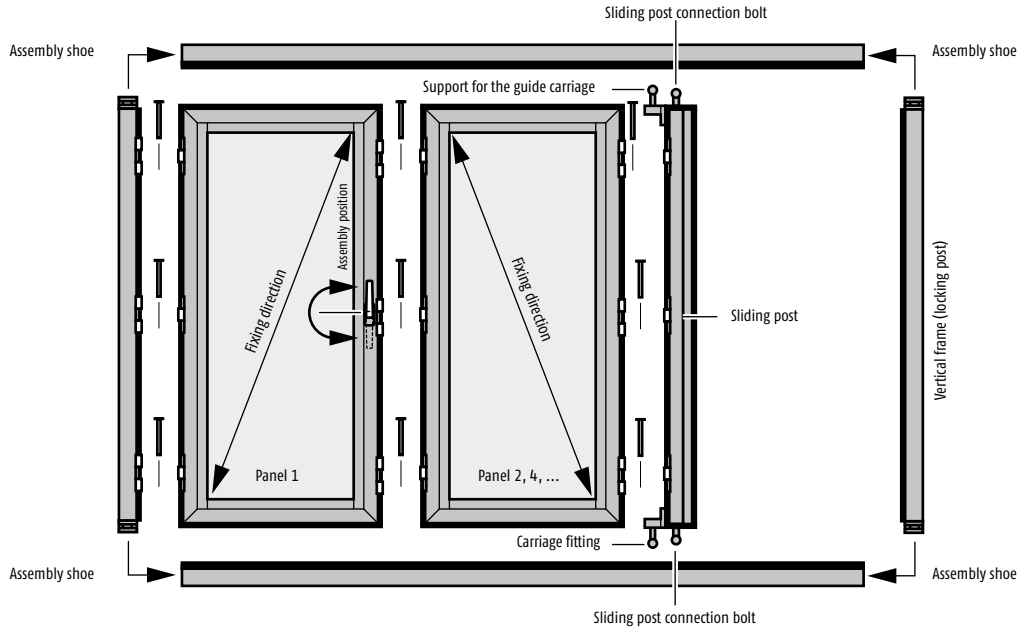

2

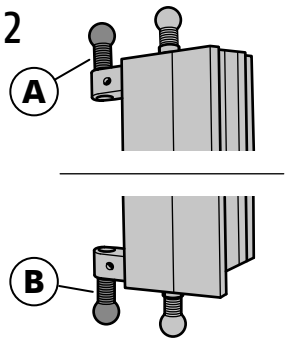

3

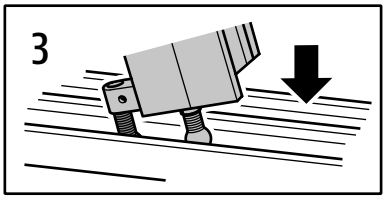

4

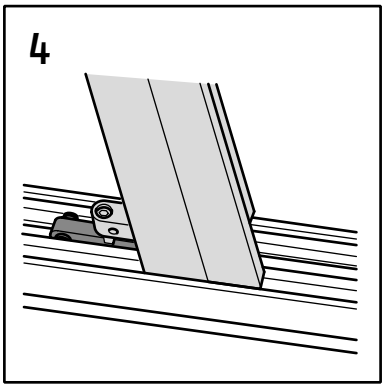

- Picture 2:

  Bolt (A) carriage bracket
  Bolt (B) carriage

5

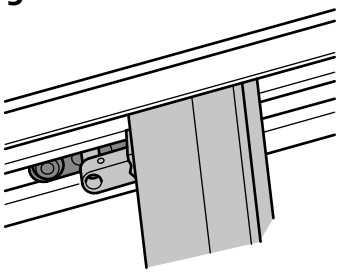

- Insert the sliding post in a slightly angled position first into the carriages (bottom rail, picture 3) and only afterwards into the carriage brackets (top rail).
- Picture 4 shows sliding post positioned in bottom rail.
- Picture 5 shows sliding post positioned in top rail.

Technical modifications and errors reserved.

Assembly of the panel notch

1

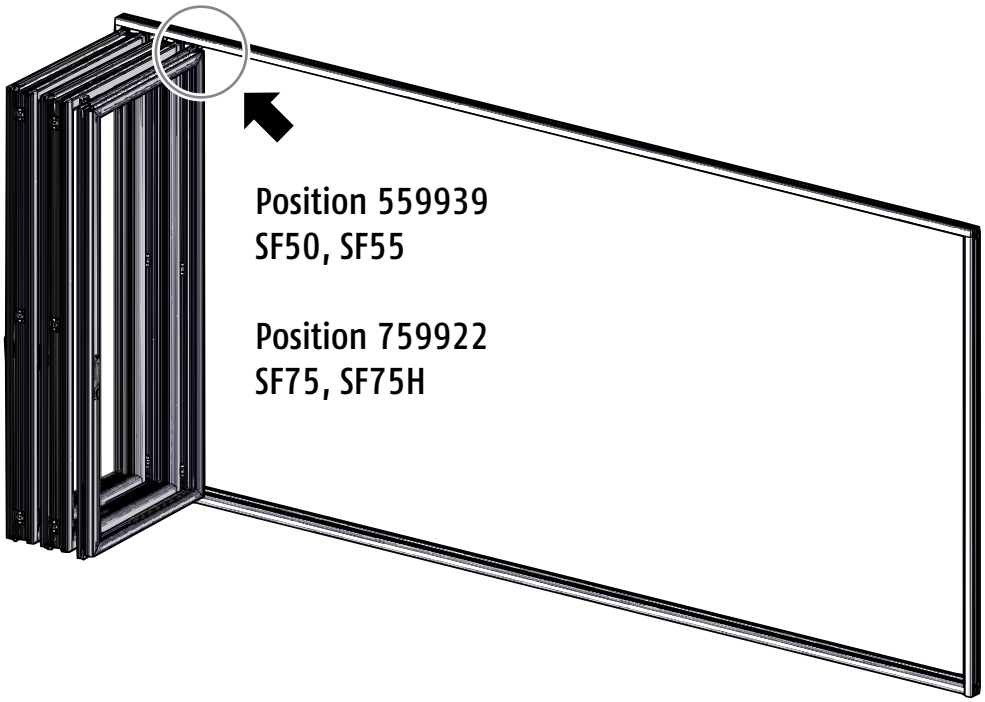

2

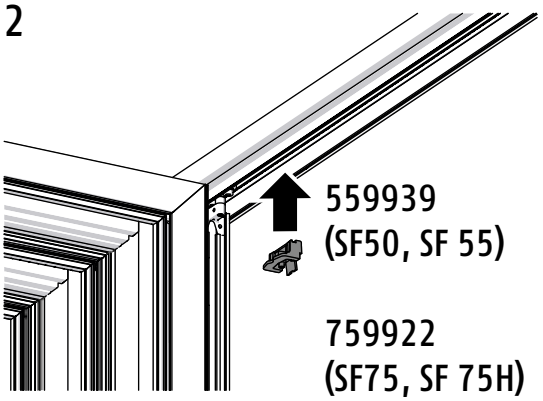

3

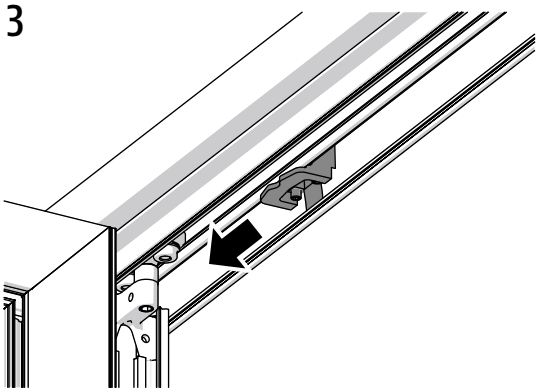

4

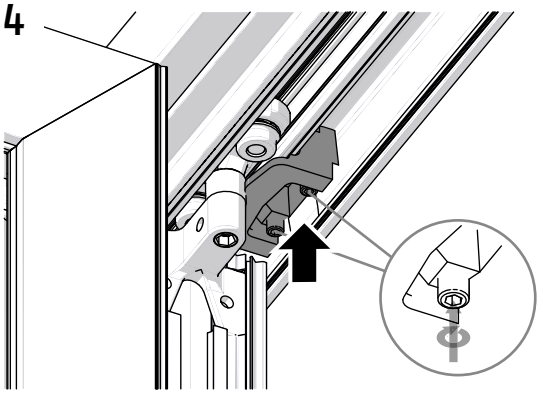

Only by uneven number of panels (3, 5, 7 ...)

Assembly only for SF 75H

1

2

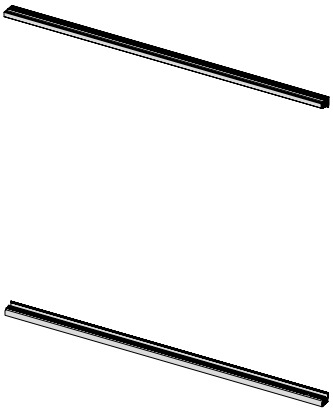

3

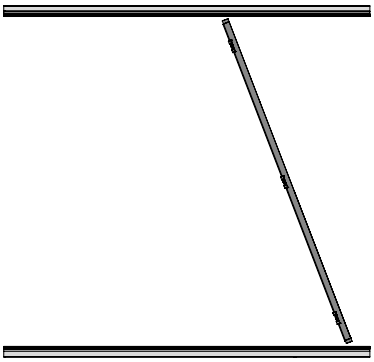

4

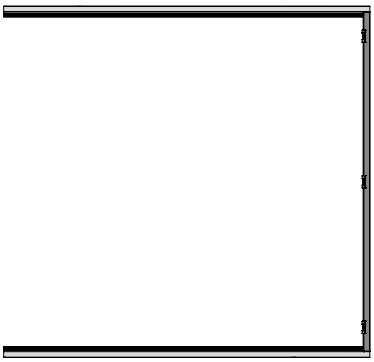

5

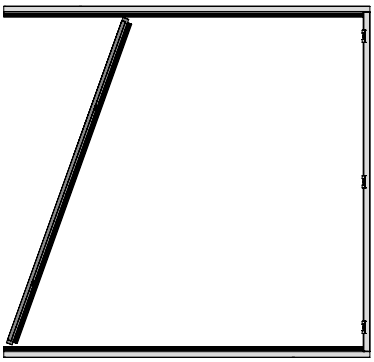

Technical modifications and errors reserved.

6

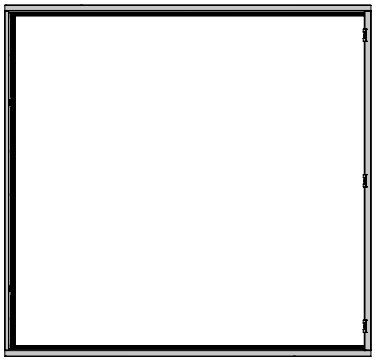

7

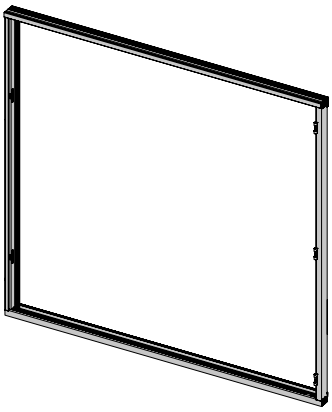

8

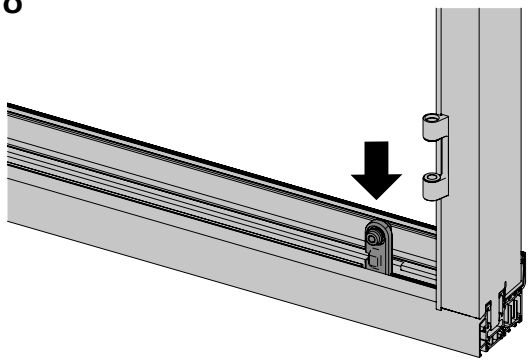

9

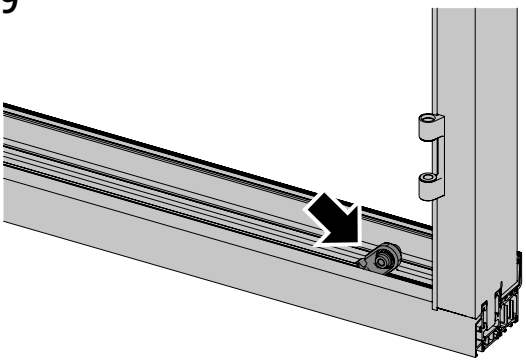

10

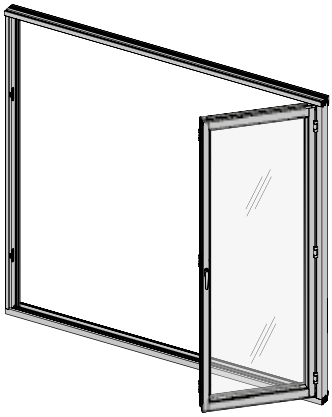

11

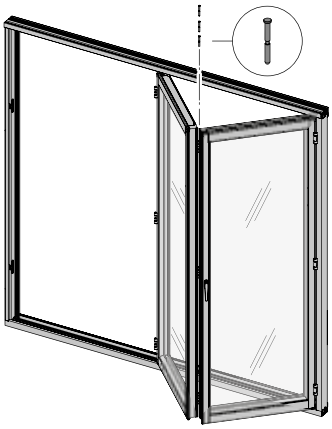

12

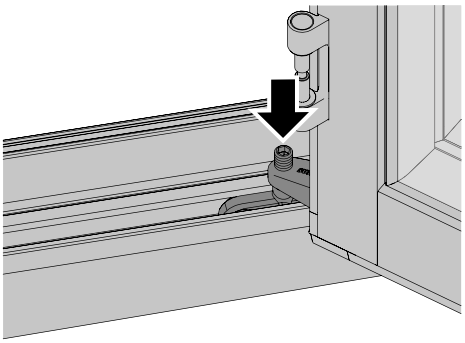

13

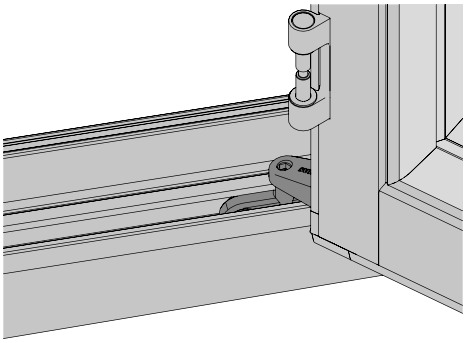

14

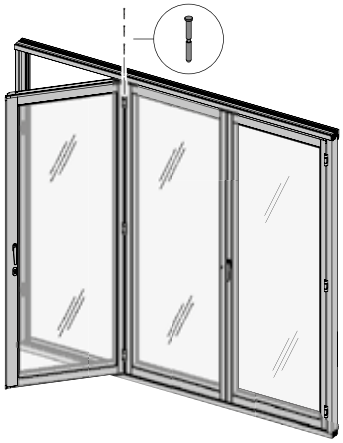

Foaming and sealing

After acceptance by the customer, the joint formed between blind frame and building structure has to be foamed and/or sealed.

The corners of the blind frame are to be sealed from the inside against the penetration of water into the structure by means of a sealing material.

On site, the glass has to be sealed from the inside and outside towards the panel frame.

Technical modifications and errors reserved.

Safety instructions

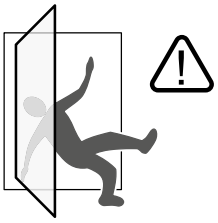

- Risk of injury by falling through open windows.

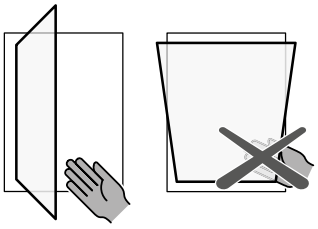

- Risk of injury by trapping of body parts.

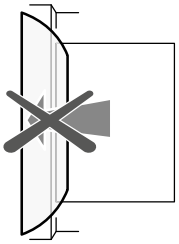

- Risk of injury and material damage by pressing the panel against the opening edge.

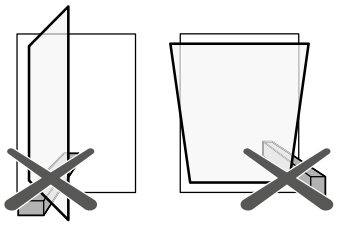

- Risk of injury and material damage by placing obstacles between panel and frame.

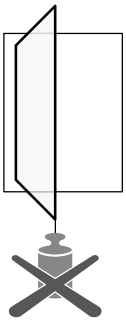

- Risk of injury and material damage due to additional load at the panel.

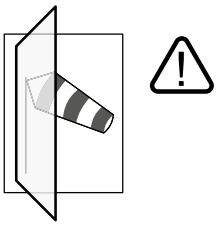

- Risk of injury by wind action.

Operation

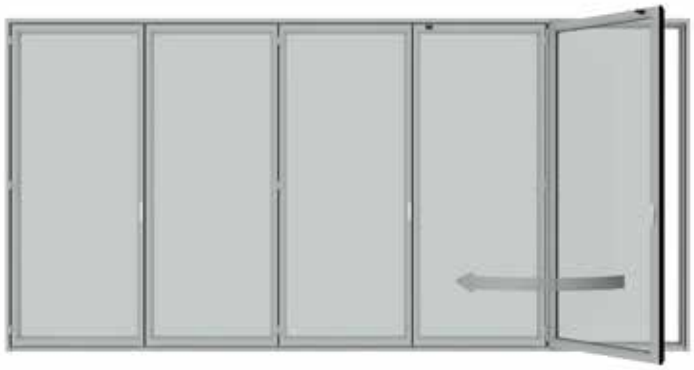

Opening of the first panel

Folding of the hinge connected panels

Parking of the folded panels

Maintenance and servicing instructions

General

External building parts are not only subject to the weather, but also increased stress caused by smoke, industrial fumes and aggressive airborne dust. In conjunction with rain and dew, deposits of these substances may affect the surface and change the appearance. External parts must therefore be cleaned (at least twice annually or more frequently depending on the degree of contamination) to avoid possible settling of deposits. The sooner you remove dirt from the surface, the easier it is to clean. Observe the safety instructions and instructions for use of the respective servicing and cleaning products. When cleaning do not use a material with an unknown composition. If you are not certain about the effect of the cleaner , then test it first by cleaning a visually unimportant, non-exposed portion of the component.

Fittings

All fittings must be regularly checked for tightness and wear. Attachment screws must be tightened and defective parts replaced as required. In addition, at least once a year, all moving and sliding fittings must be lightly greased with fitting grease. Only servicing and cleaning agents that do not affect the corrosion protection of fittings should be used.

Glass surfaces

Dirty glass surfaces can be cleaned using water and a sponge or cloth, etc. Commercially available non-abrasive glass cleaners (such as Ajax, Pril, etc.) can be added to the water. Stubborn stains such as paint or tar splashes should be removed with methylated spirits or white spirit.

Caution!
Do not use alkaline caustic solutions, acids, and fluoride-containing detergents to clean glass surfaces.

Caution!
A suitable protective film should be used to protect the glass surface against mortar spattering, cement slurry, sparks or weld sputtering from partitioning screens and stone-facade acidic-cleaner..

Seals

All seals must be cleaned and lubricated at least once a year to ensure good functioning. For this purpose we recommend the use of a seal care product. The care product maintains the suppleness of the seal, thus preventing premature brittleness. Ensure that the seals are not damaged and do not come into contact with solvent materials.

Aluminium surfaces

Anodizing and powder coating is a highly durable and decorative finishing for aluminium components. To maintain the decorative appearance of such components for decades, the surfaces need to be regularly maintained by means of cleaning twice a year.

Cleaning anodized surfaces

Cleaning of the surfaces must not take place in direct sunlight, the surface temperature must not exceed 25°C. Use only neutral pH cleaners such as normally diluted washing up liquid. Abrasive or scouring materials must not be used to clean heavily soiled, anodized surfaces - cleaning pastes are available.

Technical modifications and errors reserved.

Cleaning powder-coated surfaces

In the same way as for anodized elements, cleaning must be carried out whilst cold (maximum of 25 °C surface temperature). In this case also, use only pH-neutral material. Solvent-based cleaners attack the surface of the powder coating and, like scouring or abrasive cleaners, should not be used. To remove stubborn fat and greasy dirt we recommend aroma-free methylated spirits. This must only be applied for a short time and then rinsed off with clean water. In addition, we recommend treatment with car wax to leave a water-repellent film. Check on a non-exposed area whether the material used has an adverse effect on the shine.

Wood surfaces on wood/aluminium elements

For the cleaning of internal wood surfaces it is best to use mild detergent such as dilute detergent and soap suds. Since the internal wood surfaces are not subject to wear and weathering by rain and sun light, painting is not required. Avoid abrasive, corrosive and solvent-based cleaners. Use only soft cloths to avoid scratching the paint surface. Window cleaners contain small traces of alcohol and ammonium chloride. These materials are very suitable for cleaning the glass as well as the wood-frame sections. After cleaning, dry the wood profiles with a dry, soft cloth, because extended exposure to alcohol can soften the paint surface.

SUNFLEX Aluminiumsysteme GmbH
Im Ruttenberge 12
D-57482 Wenden-Gerlingen
Tel.: +49 (0) 2762 / 9253-0
Fax: +49 (0) 2762 / 9253-280
info@sunflex.de

Technical modifications and errors reserved.

Limited Warranty

Seller warrants that the Products will, when delivered, substantially conform to the respective written Product description furnished to Purchaser, and all Products to be free from defects in material and workmanship within twenty four (24) months period from the date of manufacture and will perform in accordance with SUNFLEX operating instructions if properly installed, used and serviced. Should a Product(s) become defective within such period, Purchaser at its cost shall submit its claim and the defective Product to SUNFLEX and the sales receipt stating the defects and the circumstances under which the defect occurred in which case SUNFLEX will examine, and upon establishing Purchaser's validity of claim, at its sole discretion repair the Product(s), exchange the Product(s), or refund the purchase price, which shall fully satisfy and discharge any and all warranty claims. Warranty related inquiries should be addressed to the following address: SUNFLEX WALL SYSTEMS LP c/o Warranty Service, Naples, Florida. This warranty extends only to Product(s) installed as specified for the respective Product(s) and does not extend to any product(s) (i) which has been used inconsistent with its intended use, (ii) has not been properly installed by a qualified licensed technician experienced in the installation of the Product(s), (iii) which was modified or repaired by anyone other than SUNFLEX personnel or authorized service representative, (iv) damaged because of misuse, neglect or improper installation or service. No warranty of fitness for a particular purpose is made. In addition, the foregoing warranty shall not apply to any parts or components not manufactured by Seller.

THE WARRANTIES SET FORTH HEREIN ABOVE ARE IN LIEU OF ALL OTHER WARRANTIES EXPRESS OR IMPLIED. THE SALE IS MADE ON THE EXPRESS UNDERSTANDING THAT HERE IS NO IMPLIED WARRANTY THAT THE PRODUCTS SHALL BE FIT FOR ANY PARTICULAR P URPOSE. THE PURCHASER ACKNOWLEDGES THAT PURCHASER IS NOT RELYING ON SELLER'S SKILLS OR JUDGMENT TO SELECT OR FURNISH PRODUCTS SUITABLE FOR ANY PARTICULAR PURPOSE OR JOB OR TO DETERMINE FEASIBILITY OF THE PRODUCTS FOR ANY PARTICULAR PURPOSE. THE PURCHASER ACKNOWLEDGES THAT THERE ARE NO WARRANTIES WHICH EXTEND BEYOND THE DESCRIPTION HEREIN. IN NO EVENT SHALL SUNFLEX BE LIABLE FOR CONSEQUENTIAL, INCIDENTAL, OR SPECIAL DAMAGES, AND DAMAGES ARISING OUT OF THE PURCHASE, UNLOADING, HANDLING, AND USE OF ANY PRODUCTS, ALL OF WHICH ARE WAIVED BY PURCHASER AND IN ANY EVENT, DAMAGES HEREUNDER SHALL BE LIMITED TO A MAXIMUM OF THE PURCHASE PRICE. THIS WARRANTY GIVES THE CONSUMER SPECIFIC LEG ALL RIGHTS AND THE CONSUMER MAY ALSO HAVE OTHER RIGHTS WHICH MAY VARY FROM STATE TO STATE.

The Purchaser shall inspect and accept or reject acceptance of the Products immediately upon the arrival and shall, within five (5) days after the arrival, give written notice to SUNFLEX of any claim that the Product(s) do not conform with the terms of the order. If the Purchaser shall fail to give such notice, the Product(s) shall be deemed to have been accepted and the Purchaser shall pay for the products in accordance with the terms of the order. The purchaser expressly waives any rights the Purchaser may have to revoke acceptance after such five (5) day period.

TERMS OF SALE

1. Purchase of Products

A Except to the extent otherwise agreed upon in writing, the terms set forth herein shall govern the sale and delivery of the wall systems described on the reverse side hereof ("Products') by Sunflex Wall Systems LP ("Seller') and purchased by the purchaser named on the reverse side hereof ("Purchaser').

B All dealings between the parties shall be in writing and no order of Purchaser shall be binding on Seller until approved in writing by Seller.

C Prices of Products are subject to change without notice, and all references in sales brochures, technical data sheets and offers as to size, weight, and other details of the Products are approximate only. No such term shall be binding on Seller unless expressly incorporated in a purchase order which is approved and accepted by Seller in accordance with the terms hereof.

D Except as provided in subsection (e) of this Section 1, a purchase contract hereunder shall become effective upon the mailing of a written acceptance of Purchaser's order by Seller.

E If the terms stated in Purchaser's order are not acceptable to Seller, Seller may amend, delete or alter such terms and submit a counter-offer incorporating such amendments, deletions or alterations to Purchaser, it being understood and agreed that such counter offer shall be deemed accepted by Purchaser and shall become binding on the parties if and in case Seller does not receive notice to the contrary from Purchaser within 3 (three) days after Seller has sent such counter-offer to Purchaser.

F Purchaser acknowledges that Seller's acceptance of any purchase order is dependent on Seller's prior approval of Purchaser's credit. Purchaser agrees that Seller may demand assurances of Purchaser's ability to pay by requesting such trade or banking references or such other information as deemed adequate by Seller.

2. Delivery

A Unless expressly agreed upon in writing to the contrary, the terms of delivery are Delivery Duty Paid (DDP) to Purchaser's receiving dock. Seller will use commercially reasonable efforts to make the products available for pick up by Purchaser or delivery within a reasonable time after acceptance of an order from Purchaser.

B Purchaser bears the risk of loss or destruction of the Products upon and after the first to occur of (i) signed receipt and acceptance of delivery of Products by Purchaser or his agent, (ii) pick-up or acceptance of the Products by Purchaser or its common carrier at Seller's place of business or (iii) the 14th (fourteenth) day after notification from Seller that the Products are ready for pick-up or delivery from the seller's place of business. In the event the Purchaser requests a delay in pick-up or delivery, Purchaser assumes all risk of loss, damage and/or destruction of the Products from the date the Products are ready to be picked up or delivered.

C Purchaser agrees that it will pick up at Seller's place of business or agree for Seller to ship Products purchased for delivery within 14 (fourteen) days after written notification from Seller that Products are ready to be received by Purchaser. If Purchaser does not pick up or agree to have Seller ship products within 14 (fourteen) days after notification from Seller and/or Seller is required to store the Products due to any delay caused by Purchaser, Purchaser shall reimburse Seller for reasonable storage charges.

D Seller reserves the right to make the Products available for pick-up and delivery in installments provided that such installments shall not be less than one product unit, unless otherwise expressly stipulated to the contrary in a written document signed by Seller. Delay in delivery of any installment shall not relieve Purchaser of its obligation to accept remaining deliveries.

E If Purchaser should request any modification of the order after Seller's acceptance, Seller shall have the right to extend the delivery time period as reasonably needed to complete Purchaser's change order.

3. Force Majeure

Notwithstanding anything to the contrary, Seller shall not be liable for any delay or failure to perform hereunder when such failure or delay is, directly or indirectly, caused by, or in any manner arises from fire, floods, accidents, civil unrest, acts of God, war, terrorism, governmental interference or embargoes, strikes, labor difficulties, shortage of labor, fuel, power, materials, or supplies, breakage of machinery or apparatus, transportation delays, or any other cause or causes (whether or not similar in nature to any of those hereinbefore specified) beyond its control.

4. Warranties and Claims

A Seller warrants that the Products when delivered shall comply with standards and limitations set forth in the Limited Warranty.

B Purchaser shall within five (5) working days after its receipt of the Products, and in any event no later than thirty (30) days from the shipping date, give written notice to Seller of any claim that the Products do not conform with the terms of the order or have material defects which a casual inspection would disclose. If Purchaser fails to give such notice, the Products shall be deemed to conform to the terms of the order, and Purchaser shall be deemed to have accepted and shall pay for the Products in accordance with the terms of this order. Purchaser expressly waives any right Purchaser may have to revoke acceptance or claim a breach of warranty with respect to such obvious or material defects, a casual inspection should have disclosed after such five-day period.

EXCEPT AS SET FORTH EXPRESSLY IN SELLER.S STANDARD WRITTEN WARRANTY WITH RESPECT TO THOSE ITEMS MANUFACTURED BY SELLER, SELLER MAKES NO REPRESENTATIONS OR WARRANTIES OF ANY KIND, EXPRESS OR IMPLIED, WRITTEN OR ORAL, WITH RESPECT TO THE PRODUCTS, INCLUDING, WITHOUT LIMITATION, ITS MERCHANTABILITY OR FITNESS FOR A PARTICULAR PURPOSE.

PURCHASER ACKNOWLEDGES THAT PURCHASER IS NOT RELYING ON SELLER.S SKILL OR JUDGMENT TO SELECT OR FURNISH PRODUCTS SUITABLE FOR ANY PARTICULAR PURPOSE OR JOB, OR TO DETERMINE THE FEASIBILITY OF THE PRODUCTS FOR ANY PARTICULAR APPLICATIONS. PURCHASER ACKNOWLEDGES THAT THERE ARE NO WARRANTIES WHICH EXTEND BEYOND THE DESCRIPTION HEREIN. NEITHER SELLER NOR ANY OF ITS AFFILIATES SHALL BE LIABLE FOR, AND PURCHASER WAIVES ANY CLAIM AGAINST SELLER AND ITS AFFILIATES FOR, MULTIPLE, INCIDENTAL, SPECIAL OR CONSEQUENTIAL DAMAGES, INCLUDING, BUT NOT LIMITED TO, DAMAGE OR LOSS OF OTHER PROPERTY OR PRODUCTS, LOSS OF PROFITS OR REVENUE, LOSS OF USE OF MACHINERY OR PARTS THEREOF, INABILITY TO PERFORM SPECIFIC PROJECTS, COST OF CAPITAL, INJURIES TO OR DEATH OF PERSONS OR DAMAGE TO PROPERTY OR CLAIMS RESULTING FROM CONTRACTS AND/OR AGREEMENTS BETWEEN PURCHASER, ITS CUSTOMERS AND/OR SUPPLIERS, IN EACH CASE WHICH IN ANY WAY RELATE TO THE PURCHASE OF PRODUCTS BY PURCHASER OR THE USE OF THE PRODUCTS.

5. Prices

A All prices quoted by Seller are in U.S. funds and shall be on a net basis DDP (Delivered Duty Paid) to Purchaser's receiving dock.

B All prices quoted by Seller are subject to adjustment due to Purchaser's change orders, if any.

C Unless otherwise expressly agreed upon in writing, the price quoted includes the cost of packaging, special containers, crating, palletizing, applicable taxes and duties, shipping, insurance or any other cost to provide Products to Purchaser.

6. Payment

A Unless otherwise expressly agreed upon in writing, payment shall be made in full according to the terms specified on page 1 hereof. Purchaser shall not withhold or reduce payments on account of complaints, claims, or counterclaims not acknowledged and accepted by Seller.

7. Default

A Purchaser shall be in default (hereinafter .Default.) under this Agreement and Seller may terminate this Agreement and exercise all other remedies in law or in equity if Purchaser: (i) fails to make payment hereunder to Seller when due; or (ii) breaches any other term, provision or condition contained in this Agreement; or (iii) is declared to be in default under any other agreement between Purchaser and Seller, and if in any of the foregoing cases set out in (i), (ii) or (iii), Purchaser fails to cure any said breach or default within 5 (five) days following written notice thereof from Seller.

B Upon the occurrence of a Default, Seller may elect to exercise any one or more of the following options:

i. Seller may hold the Products until such time as Purchaser has paid the respective purchase price and any expenses (including finance charges, returned check fees and interest determined at a rate equal to the lower of eighteen percent (18%) per annum or the maximum rate permitted by applicable law incurred by Seller as a consequence of such default.
ii. Seller may sell the Products to a third party and require Purchaser to reimburse Seller for any losses, or expenses associated therewith.
iii. Seller may require payment in cash prior to delivery of any Products hereunder.
iv. Seller may withhold any Products not delivered to Purchaser at the time of the default.
v. Seller may terminate this Agreement.
vi. Seller may exercise all other rights hereunder and may seek all other remedies available to it in law or in equity.

C Purchaser agrees that, in the event any legal action should be deemed necessary by Seller to recover any sums due hereunder or under any promissory note, trade acceptance, or invoice, or, if applicable, to recover possession of the Products, as defined hereinabove, or any proceeds from the sales thereof, there shall be added to the sums due from Purchaser to Seller the costs of collection, including reasonable attorney's fees.

D When reasonable grounds for insecurity arise with respect to Purchaser's performance, Seller may in writing demand assurance of due performance and until it receives such assurance may suspend any performance for which it has not already received payment.

Technical modifications and errors reserved.

8. Protection of Trade Secrets and Confidential Information

The parties hereto agree that

A Except as provided for in subsection (b) of this Section, Purchaser shall not disclose any Trade Secrets or Confidential Information of the other party to any individual or entity not a party to this Agreement.

B Purchaser may make available Trade Secrets or Confidential Information to its qualified employees, as defined herein after, to the extent that such information must be disclosed to such qualified employees to apply the Trade Secrets or Confidential Information to its intended use. A "qualified employee' shall mean any individual employed by or affiliated with Purchaser who is bound by a valid and fully enforceable confidentiality agreement which contains confidentiality obligations substantially similar to the confidentiality obligations stated herein, prior to disclosure of the Trade Secrets and Confidential Information to such employee.

C For purposes of this Agreement the following terms shall have the meanings set forth below:

i. The term 'Trade Secrets' shall mean and include any and all designs, plans, processes, tools, mechanisms, programs or compounds known to only Seller, or to those of its clients and employees to whom they must be confided in order to be applied to the uses intended, some or all of which may arise to the level of being patentable or subject to copyrights, all as further defined under the laws of the State of Florida.

ii. The term "Confidential Information' shall mean and include information not rising to the level of Trade Secret and not generally known to or by a business in competition with the Seller or otherwise publicly disseminated by the protected party hereto, the disclosure of which may be beneficial to a competing business or detrimental to Seller.

9. Arbitration

Any controversy or claim arising out of or relating to this Agreement, or the breach hereof, shall be submitted to and be finally resolved by arbitration, to be conducted by the American Arbitration Association (.AAA.), with such arbitration to be held in Atlanta, Georgia in accordance with the AAA.s Commercial Arbitration Rules then in effect. Each party hereby irrevocably agrees that service of process, summons, notices, as other communications related to the arbitration procedures shall be deemed served and accepted by the other party five (5) working days after having been mailed by first class registered mail, return receipt requested, postage prepaid, to the other party, or if actually received by the other party. The arbitration shall be conducted by one arbitrator, as selected by the AAA. Any award or decision rendered in such arbitration shall be final and binding on both parties, and judgment may be entered thereon in any court of competent jurisdiction if necessary. Except as may be provided to the contrary herein, each party hereto shall pay any and all expenses incurred by such party in connection with such arbitration proceeding, unless otherwise determined by the arbitrator.

10. Miscellaneous

A Purchaser may not assign this contract without the express prior written consent of Seller.

B Except as otherwise expressly provided in Section 1(e) hereof or in a written document, signed by Seller and Purchaser, this document and attachments and exhibits thereto constitute the entire agreement between Seller and Purchaser with respect to the subject matter herein contained and all prior agreements and communications between Seller and Purchaser, whether oral or written, are superseded by this Agreement.

Technical modifications and errors reserved.

C No modification, limitation, waiver or discharge of this Agreement or of any of its terms shall bind Seller unless in writing and signed by a duly authorized employee of Seller. The failure of Seller to insist, in one or more instances, on performance by Purchaser in strict compliance with the terms and conditions hereof shall not be deemed a waiver or relinquishment of any right granted hereunder with respect to any succeeding breach of the same or other provision hereof.

D All notices required hereunder shall be in writing and sent by first class mail or by telefax or written confirmation to such addresses as stated on the reverse side hereof.

E This Agreement shall be governed by, and construed, interpreted and enforced under the laws of the State of Florida without giving effect to the conflict of laws principles.

F In connection with any litigation, including appellate proceedings, arising out of or pertaining to any of the contractual relationships between Seller and Purchaser or the breach thereof, as contemplated herein, all costs and expenses, including reasonable attorneys fees, shall be borne by the losing party or, as the case may be, shall be prorated to properly reflect any partial losing or prevailing of the parties to such litigation.

G In case any conditions of this Agreement should be or become unenforceable under applicable law, the remaining provisions, stipulations and conditions of this Agreement shall not be affected thereby.

Technical modifications and errors reserved.